REVISION SCHEDULE

REV. NO.	REV. DESCRIPTION	REV. DATE	DRAWN	CHECKED
PL1	ISSUED FOR PLANNING	14/03/2024	JPC	KO'M

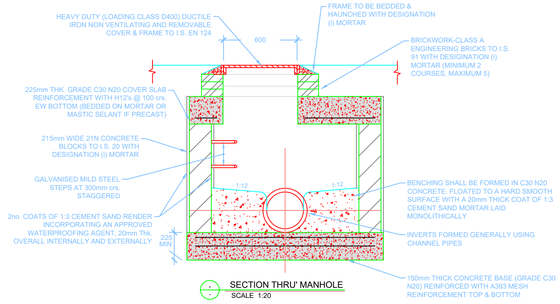

SECTION THRU' MANHOLE
SCALE 1:20

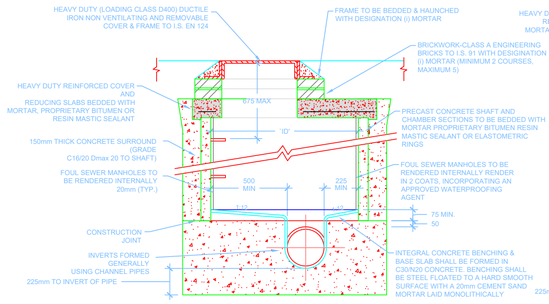

SECTION THRU' MANHOLE
SCALE 1:20

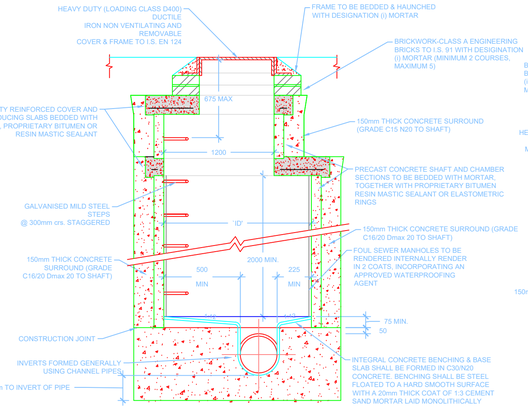

SECTION THRU' MANHOLE
SCALE 1:20

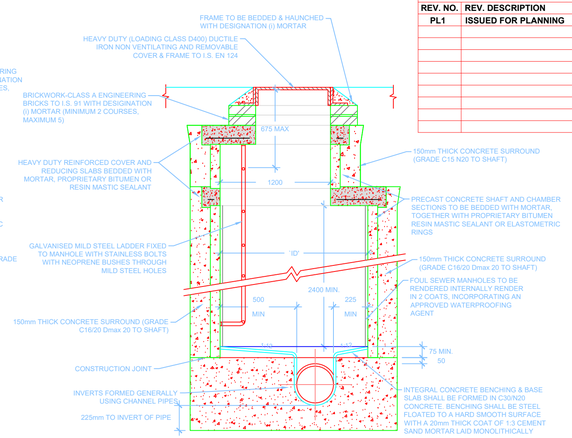

SECTION THRU' MANHOLE
SCALE 1:20

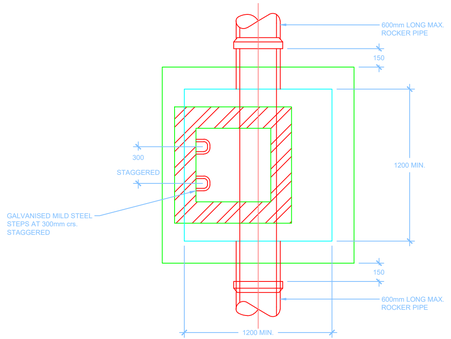

PLAN ON MANHOLE (TYPE A)
SCALE 1:20
(1m DEEP, COVER LEVEL TO PIPE SOFFIT)

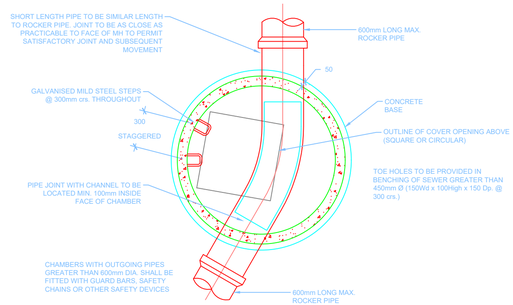

PLAN ON MANHOLE (TYPE C)
SCALE 1:20
(1m TO 3m DEEP, COVER LEVEL TO PIPE SOFFIT) (FOR INTERNAL DIAMETER OF MANHOLE (I.D.) REFER TO SCHEDULE.)

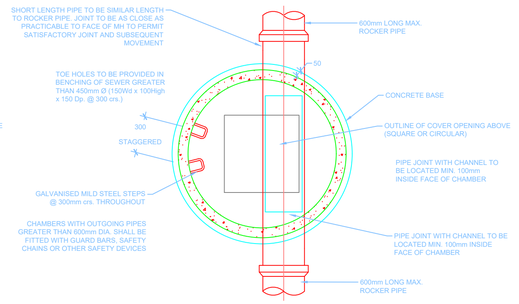

PLAN ON MANHOLE (TYPE D)
SCALE 1:20
(3 TO 5m DEEP, COVER LEVEL TO PIPE SOFFIT) (FOR INTERNAL DIAMETER OF MANHOLE (I.D.) REFER TO SCHEDULE)

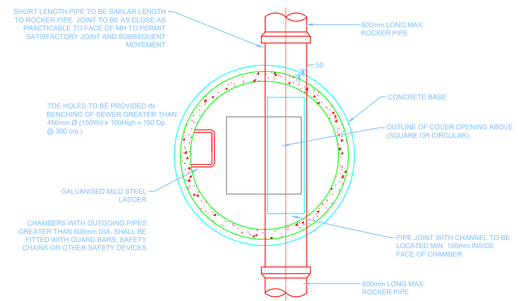

PLAN ON MANHOLE (TYPE E)
SCALE 1:20
(5 TO 6m DEEP, COVER LEVEL TO PIPE SOFFIT) (FOR INTERNAL DIAMETER OF MANHOLE (I.D.) REFER TO SCHEDULE.)

MANHOLE - INTERNAL DIMENSIONS

PIPE Ø (mm)	MANHOLE TYPE			
	A	C	D	E
UP TO 225	1200 x 1200	1200Ø		
300	1200 x 1200	1200Ø	1200Ø	1200Ø
375	1200 x 1200	1350Ø	1350Ø	1350Ø
450	1200 x 1200	1350Ø	1350Ø	1350Ø
525	1200 x 1200	1500Ø	1500Ø	1500Ø
600		1500Ø	1500Ø	1500Ø
675		1500Ø	1500Ø	1500Ø
750		1500Ø	1500Ø	1500Ø
900		1500Ø	1500Ø	1500Ø

NOTES

1. ALL DIMENSIONS ARE IN MILLIMETRES (mm) UNLESS NOTED OTHERWISE.
2. RODDING EYE CHAMBER SHALL BE COVERED WITH APPROVED HEAVY DUTY METAL COVERS TO IS 261 AND BS 5834. COVER AND FRAME SHALL BE SUITABLE FOR ROAD AND TRAFFIC CONDITIONS AND IS SUBJECT TO THE APPROVAL OF IRISH WATER.
3. ALL CHAMBERS TO BE CHECKED FOR UPLIFT BY THE DEVELOPER BASED ON GROUND CONDITIONS WITHIN THE SITE. SHOULD ANTI FLOATATION MEASURES BE REQUIRED THEY SHALL BE SUBJECT TO APPROVAL FROM IRISH WATER.
4. ALL CONCRETE TO BE IN ACCORDANCE WITH IS EN 206.
5. MANHOLE DETAILS TO BE IN ACCORDANCE WITH IRISH WATER STANDARDS.

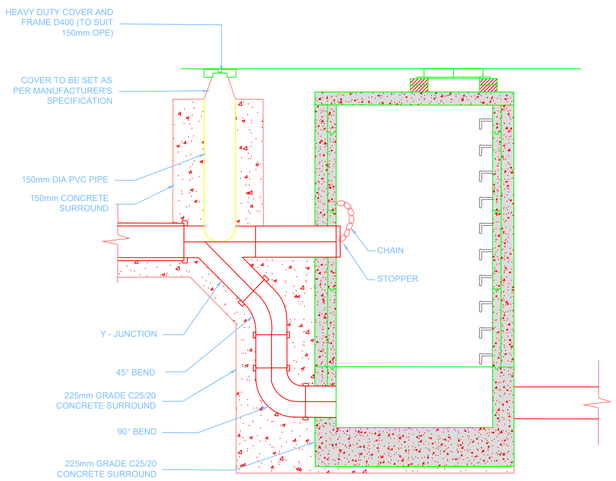

BACKDROP MANHOLE (TYPE 1)
N.T.S.
(150mm-450mm DIA (INCL.) DROP GREATER THAN 1700mm)
(500mm-900mm DIA (INCL.) DROP GREATER THAN 2300mm)

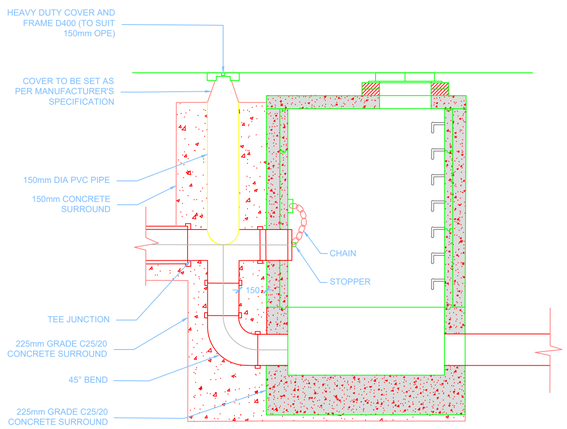

BACKDROP MANHOLE (TYPE 2)
N.T.S.
(150mm-450mm DIA (INCL.) DROP GREATER THAN 900mm AND LESS THAN 1700mm)
(500mm-900mm DIA (INCL.) DROP GREATER THAN 1300mm AND LESS THAN 2300mm)

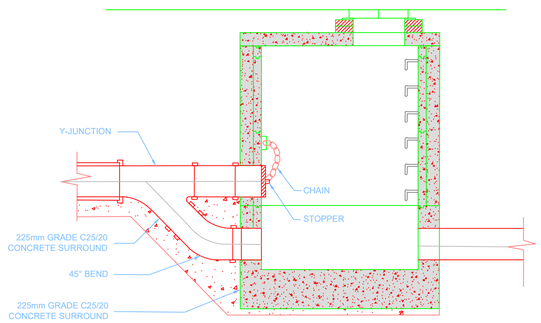

BACKDROP MANHOLE (TYPE 3)
N.T.S.
(150mm-450mm DIA (INCL.) DROP GREATER THAN 600mm AND LESS THAN 900mm)
(500mm-900mm DIA (INCL.) DROP GREATER THAN 600mm AND LESS THAN 1300mm)

Drawing Stage: PLANNING

Project Details:	
Site Address:	12th LOCK, LUCAN, CO. DUBLIN.
Client:	SOUTH DUBLIN COUNTY COUNCIL
Architect:	SFA42 ARCHITECTS
M&E Designer:	
Contractor:	

Notes

1. ALL ENGINEERS DRAWINGS TO BE READ IN CONJUNCTION WITH RELEVANT DRAWINGS AND SPECIFICATIONS.
2. ALL SETTING OUT TO ARCHITECTS DRAWINGS.
3. DO NOT SCALE FROM ENGINEERS DRAWINGS.
4. ANY DISCREPANCIES BETWEEN DRAWINGS, SKETCHES, VERBAL INSTRUCTIONS AND SITE CONDITIONS TO BE REFERRED TO THE DESIGN TEAM BEFORE WORK COMMENCES.
5. ALL LEVELS ARE STRUCTURAL UNLESS NOTED OTHERWISE.

Drawn by:	Checked by:	Approved by:	Date:
JPC	KO'M	JFC	03/2024

Project Name: BEATTY'S COTTAGE FIT-OUT
Scale: A.S. @ A1
Project Number: 2405

Drawing Title: STANDARD DRAINAGE DETAILS SHEET 1

Project:	Originator:	Zone:	Level:	Type:	Discipline:	Drawing No:	Stage:	Revision:
2405	CORA	ZZ	ZZ	DR	C	0011		PL1

CORA CONSULTING ENGINEERS
Behan House,
10 Lower Mount St.,
Dublin 2. D02 HT71
Tel: +353 (0)1 661 1100
e-mail: info@cora.ie
Web: www.cora.ie